METRA
Energie-Messtechnik
Member of Bopp & Reuther Messtechnik Group

PRODUCT INFORMATION 2022

Bopp & Reuther Messtechnik GmbH / SGE METRA Energie-Messtechnik
Am Neuen Rheinhafen 4 - 67346 Speyer / Deutschland
Phone: +49 6232 657-0 Mail: info@bopp-reuther.com www.metra-emt.de / www.bopp-reuther.com

OVERVIEW

INTRODUCTION Page 3

STEAM MEASUREMENT
Compact Orifice based solutions Page 4
Vortex Meter based solutions Page 5
Venturi, Nozzle based solutions Page 6

HEAT MEASUREMENT Page 7

COLD MEASUREMENT Page 8
SpiraMAG® Page 9

COMPRESSED AIR MEASUREMENT Page 10

ENERGY FLOW COMPUTER ERW 700 Page 11

PROFITABILITY OF HIGH-PRECISION MEASUREMENTS Page 12

EXAMPLE OF CALCULATION Page 13

REFERENCES Page 14

INTRODUCTION

We**, Bopp & Reuther Messtechnik**, would like to present you with this brochure the product and service range of our strategic business unit **METRA ENERGIE MESSTECHNIK**.

METRA ENERGIE MESSTECHNIK, formerly IWK, was acquired by Bopp & Reuther Messtechnik from the Danfoss Group in 2005. It was managed as a wholly owned subsidiary and finally integrated in January 2021 as a strategic business unit in the field of accurate energy flow measurement of steam, heat, cold, compressed air, technical gases, natural gas, etc.

METRA Energie-Messtechnik
Member of Bopp & Reuther Messtechnik Group

www.metra-emt.de

For more than 30 years, measurement and control technology has been our passion. Known for outstanding measurement accuracy even under the most difficult conditions, our incentive is to offer our customers a custom-fit solution for flow and energy measurements.

Our devices are used for the following applications:

- Steam, flow and energy measurement (balancing and billing measurement)
- Heat quantity measurement for water, condensate, thermal oils, etc.
- Durchfluss- und Energiemessung für technische Gase wie z. B. Luft oder Stickstoff (Bilanzierungs- und Verrechnungsmessung)
- Kälteleistungsmessung für Wasser und Kältemittel

We are certified according to MID 2014/32/EU Annex MI 004 or Chapter VI

Required services such as calibration, commissioning or maintenance work are carried out by our service team in Germany or our representatives abroad.

STEAM MEASUREMENT SOLUTIONS
AUTARKON® EDZ / EWZ 120 / 127

METRA Energie-Messtechnik
Member of Bopp & Reuther Messtechnik Group

Steam meter Series
EDZ 120.1

MAIN CHARACTERISTICS

Product type:	Compact orifice based on steam measuring system series Autarkon® for flowrate and energy metering
Application:	for steam measurement (saturated or overheated) or liquids like water, thermal oil, glycol mixtures etc.
Measuring accuracy:	< ±1.0% of measured value
Measuring range:	30:1, adaptable to process condition by sizing of orifice bore
Ex-approval:	Zone 2
Process temperature:	-20°C to +250°C (Standard) max +350°C
Process pressure:	PN 40
Housing material:	converter housing aluminum painted (EMC secure)
Wetted parts:	Stainless steel
Power supply:	230 VAC, optional 24 VDC
Input:	2 x 4-20 mA, with ext. power supply 2 x Freq. / Pulses, 2 x PT100 / 500 / 1000
Output:	3 x Open Collector Meter Status, 2 x 0/4-20 mA active M-Bus, Modbus (RS 485, Ethernet, Profibus: optional)
Process connection:	Wafer type design
Special features:	low pressure losses, zero adjustment module ensures maximum measuring accuracy and long-term stability, with integrated pressure and temperature compensation, combined steam / condensate measuring possible

MEASURING RANGE

Type	DN	Flowrate*	for liquids [m³/h]	for steam 10 bar, 180°C [kg/h]	Weight PN 40 (kg)	Length (mm)	Height EDZ / EWZ 127 (mm)	Height EDZ / EWZ 120 (mm)
EDZ / EWZ 120 / 127	15	min	0.07	4	7	65	320	300
		max	1.8	100				
	20	min	0.12	7	8		325	305
		max	3	170				
	25	min	0.2	11	9		330	310
		max	5	280				
	32	min	0.32	19	10.5		335	315
		max	8	480				
	40	min	0.44	25	12		340	320
		max	11	640				
	50	min	0.72	40	14.5		345	325
		max	18	1020				
	65	min	1.24	68	17		350	330
		max	31	1700				
	80	min	1.68	91	21		360	340
		max	42	2330				
	100	min	2.8	160	25		370	350
		max	72	3950				
	125	min	4.3	240	34		385	365
		max	107	5930				
	150	min	6.3	350	36		400	380
		max	158	8700				
	200	min	10.6	580	51		430	410
		max	265	14600				
	250	min	16.6	920	77		450	430
		max	415	23000				

Fulfills ISO 5157 requirements, so that any part of the system can be separately checked at any time

*with zero-balancing module

Further information and product variants are available on request.

Ex PTB Physikalisch-Technische Bundesanstalt Braunschweig und Berlin

Bopp & Reuther Messtechnik GmbH / SGE METRA Energie-Messtechnik
Am Neuen Rheinhafen 4 - 67346 Speyer / Deutschland
Phone: +49 6232 657-0 Mail: info@bopp-reuther.com www.metra-emt.de / www.bopp-reuther.com

STEAM MEASUREMENT SOLUTIONS
VORTEX METER VTX 3

METRA Energie-Messtechnik
Member of Bopp & Reuther Messtechnik Group

MAIN CHARACTERISTICS

Product type:	indirect volume and mass flow meter Series VTX3
Application:	Flow and volume measurement for liquids, gases and steam
Measuring accuracy:	±0.75 % of the measured value
Ex-approval:	Zone 1
Process temperature:	-40°C to +240°C
Process pressure:	up to 100 bar
Housing material:	Stainless steel
Wetted parts:	Stainless steel
Power supply:	24 VDC
Output / Display:	2 x 4-20 mA/HART®, pulses, local indication
Process connection:	flange or wafer design
Special features:	direct calculation of energy quantities, T & P integrated compensation capability on request

MEASURING RANGE

DN	Water		Air		Saturated Steam (@ 170°C, 7 barg)	
	Qmin	Qmax	Qmin	Qmax	Qmin	Qmax
	m³/h		m³/h		Kg/h	
15	0.36	5.07	4.34	32.57	9.73	135.7
25	0.81	11.4	9.77	114.00	21,88	474.9
40	2.04	28.58	24.50	326.60	54.86	1361
50	3.53	49.48	42.41	565.50	94.98	2356
80	7.74	108.3	92.90	1239	208.1	5160
100	13.3	186.2	159.60	2128	357.5	8866
150	30.13	421.89	361.60	4822	809.9	20086
200	56.61	792.50	679.30	9057	1521	37730
250	90.49	1267	1086	14478	2432	60316
300	131.40	1840	1577	21028	3532	87601

the specified ranges have several gradations and depend on the pressure, density and temperature range

MEASUREMENT ACCURACY

Volume flow (liquids)	±0.75 % of measured value (Re ≥ 2000)
	±2.0 % of measured value (10000 Re ≥ 2000)
Volume flow (gases und steams)	±1 % of measured value (Re ≥ 2000)
	±2.0 % of measured value (10000 Re ≥ 2000)
Mass flow (gases und steams)	±1 % of measured value (Re ≥ 2000) [1]
	±2.0 % of measured value (10000 Re ≥ 2000)[1]
Mass flow (liquids)	±1.5 % of measured value (Re ≥ 2000)
	±2.5 % of measured value (10000 Re ≥ 2000)
Standard volume (gases)	±1.5 % of measured value (Re ≥ 2000)[1]
	±2.5 % of measured value (10000 Re ≥ 2000)[1]

[1] The maximum measurement deviation refers to the measurement at an operating pressure > 65 % of the measuring range end value of the pressure sensor used.

Further information and product variants are available on request.

Ex HART COMMUNICATION FOUNDATION PACTware

Bopp & Reuther Messtechnik GmbH / SGE METRA Energie-Messtechnik
Am Neuen Rheinhafen 4 - 67346 Speyer / Deutschland
Phone: +49 6232 657-0 Mail: info@bopp-reuther.com www.metra-emt.de / www.bopp-reuther.com

STEAM MEASUREMENT SOLUTIONS BASED ON VENTURI TUBES OR NOZZLES

METRA Energie-Messtechnik
Member of Bopp & Reuther Messtechnik Group

MAIN CHARACTERISTICS

Product type:	Steam measuring system based on venturi tubes or nozzles
Application:	Steam measurement
Flow rate	up to 20000 m³/h
Measuring accuracy:	up to ±0.5 % of measured value
Ex-approval:	Zone 1 or 2
Process temperature:	-10°C to +200°C (optional +600°C)
Process pressure:	PN 40, PN 250, others on request
Wetted parts:	Stainless steel, others on request
Power supply:	230 VAS or 24 VDC
Input:	Differential pressure, temperature and pressure
Output:	Flowrate / energy flow (4-20 mA, freq./pulses, communication M-Bus, Ethernet, Profibus)
Process connection:	Flanges or weld connection
Special features:	Fulfills ISO 5157 requirements, so that any part of the system can be separately checked at any time

AREA OF APPLICATION

e.g. power stations, steel industry, refineries, pulp and paper, automotive industry, etc.

MEASURING APPLICATION

Accurate measurement of the steam flow rate and/or thermal energy transferred by steam through an energy "consumer", which can be a process, a machine or between the steam generator (power plant) and a larger industrial production plant.

Meets the latest requirements of the ISO 5157 standard.

DESIGN OF THE MEASURING SYSTEM

- The most important system elements include primary elements such as venturi or nozzles, differential pressure transmitter, 2 x PT100, pressure transmitter pabs and 1 x ERW700 energy flow computer
- Nominal size: DN 15 bis DN 1000
- Output signals: up to 6 analogue and 7 pulse outputs
- M-Bus / Modbus-Interface
- Profibus DP, Ethernet
- Specific calibration traceable to national and international standards on request

Further information and product variants are available on request.

Bopp & Reuther Messtechnik GmbH / SGE METRA Energie-Messtechnik
Am Neuen Rheinhafen 4 - 67346 Speyer / Deutschland
Phone: +49 6232 657-0 Mail: info@bopp-reuther.com www.metra-emt.de / www.bopp-reuther.com

HEAT MEASURING SYSTEM

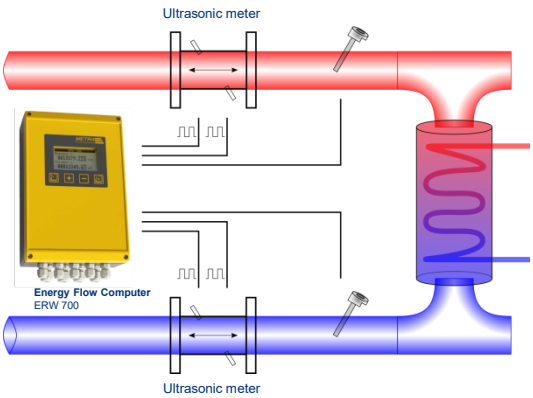

MAIN CHARACTERISTICS

Product type:	Heat Measuring System Series EWZ 817 / 837
Application:	Heat measurement (vector fluids like hot water, thermal oil etc.)
Flow rate	36 m3/h to 2000 m3/h
Measuring accuracy:	up to ±0.5 % of measured value
Ex-approval:	none
Process temperature:	+2°C to +200°C
Process pressure:	PN 16 / PN 25 / PN 40
Material wetted parts:	Stainless steel, others on request
Power supply:	230 VAC, flow computer 24 VDC
Input:	Flow, temperature hot and cold
Output:	Heat consumption (4-20 mA, freq./pulses, Communication M-Bus, Ethernet, Profibus)
Display:	LCD Color Display
Special features:	Fulfills MID 2014/32/EU Annex MI 004 resp. chapter VI requirements

AREA OF APPLICATION

e.g. power stations, industrial parks, pulp and paper, automotive industry, buildings and universities, etc.

MEASURING APPLICATION

Accurate measurement of the thermal energy flow of fluids such as hot water, condensate, thermal oil, etc. and the flow of water and water-glycol mixtures through an energy "consumer", which can be a heat exchanger, a building, a process, a machine

DESIGN OF THE MEASURING SYSTEM

- The most important system elements include ultrasonic flow meters, 2 x PT100 and 1 x ERW700 energy flow computer.
- Nominal size: DN 15 bis DN 400 (others on request)
- Output signals: up to 6 analogue and 7 pulse outputs
- M-Bus / Modbus-Interface
- Profibus DP, Ethernet
- Specific calibration traceable to national and international standards on request

Further information and product variants are available on request.

MID

Bopp & Reuther Messtechnik GmbH / SGE METRA Energie-Messtechnik
Am Neuen Rheinhafen 4 - 67346 Speyer / Deutschland
Phone: +49 6232 657-0 Mail: info@bopp-reuther.com www.metra-emt.de / www.bopp-reuther.com

COLD MEASURING SYSTEM

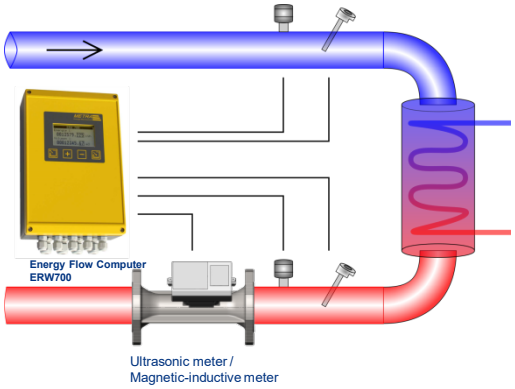

MAIN CHARACTERISTICS

Product type:	Cold Measuring System Series EWZ 617
Application:	cold measurement (vector fluids like water-glycol, etc.)
Flow rate	0.5 m³/h to 850 m³/h
Measuring accuracy:	up to ±0.5 % of measured value
Ex-approval:	none
Process temperature:	-5°C to +70°C (max +100°C)
Process pressure:	PN 10 / PN 16 / PN 40
Material wetted parts:	Stainless steel, others on request
Power supply:	230 VAC (24 VDC)
Input:	Flow, Temp hot and cold
Output:	Heat consumption (4-20 mA, freq./pulses, communication M-Bus, Ethernet, Profibus)
Display:	LCD color Display
Special features:	National approval K7.2

AREA OF APPLICATION

e.g. power stations, industrial parks, pulp and paper, automotive industry, buildings and universities, etc.

MEASURING APPLICATION

Accurate measurement of the cold energy flow of liquids such as water, water-glycol mixtures, brine etc. and the heat of vector fluids (e.g. water-glycol etc.) through an energy "consumer" which can be a heat exchanger, a building, an exothermic process, a machine.

DESIGN OF THE MEASURING SYSTEM

- the main system elements include an electromagnetic flow meter for electrically conductive fluids (min. conductivity: 5 µS/cm), 2 x PT100 and 1 x ERW700 energy flow computer
- Heat measurement (vector fluids like water-glycol, etc.)
- Nominal size: DN 25 bis DN 300
- Output signals: up to 6 analogue and 7 pulse outputs
- M-Bus / Modbus-Interface
- Profibus DP, Ethernet
- Specific calibration traceable to national standards on request

Further information and product variants are available on request.

Bopp & Reuther Messtechnik GmbH / SGE METRA Energie-Messtechnik
Am Neuen Rheinhafen 4 - 67346 Speyer / Deutschland
Phone: +49 6232 657-0 Mail: info@bopp-reuther.com www.metra-emt.de / www.bopp-reuther.com

MID SpiraMAG®

MAIN CHARACTERISTICS

Product type:	Electromagnetic flowmeter
Application:	For flow measurement of liquids with a conductivity of ≥ 5µS/cm
Measuring accuracy:	± 0.25 % of reading ± 0.1 % full scale (for powered devices)
Process temperature:	0°C to + 65°C (compact, rubber liner) 0°C to + 65°C (remote, rubber liner) -20°C to +100°C (compact, PTFE liner) -20°C to +150°C (remote, PTFE liner)
Process pressure:	Up to 40 bar, higher pressures on request
Housing material:	Painted steel / optionally stainless steel
Wetted parts:	Stainless steel, Hastelloy C, Platinum (Electrodes), soft rubber, hard robber or PTFE/PFA (liner)
Power supply:	85-265 VAC (50 / 60 Hz) / 9-36 VDC / battery
Output / Display:	4-20 mA / HART® and frequency output / pulse output (active), RS 485 / Display
Process connection:	Flanges acc. to DIN, ANSI, JIS, Tri-Clamp
Special features:	Empty pipe detection, bi-directional measurement any mounting position

MEASURING RANGE

DN	Flow range (for flow velocity* ~ 0.3 – 10 m/s)*	
	Qmin [m³/h]	Qmax [m³/h]
15	0.2	6
25	0.5	18
32	0.9	29
50	2.1	71
65	3.6	119
80	5.4	181
100	8.5	283
125	13	442
150	19	636
200	34	1131
250	53	1767
300	76	2545
350	104	3464
400	136	4524
450	172	5725
500	212	7068
600	305	10178
700	416	13854
800	543	18095
900	687	22902
1000	848	28274

* Recommended flow velocity is 2-3 m/s.

OPTIONS

- Remote version with distance to transmitter: standard 10 m optional up to 100 m
- Transducer type with power supply or battery
- Sizes up to DN 2000 on request
- Protection class standard IP67, optional IP68

Further information and product variants are available on request.

HART COMMUNICATION FOUNDATION Modbus

COMPRESSED AIR MEASURING SYSTEM

MAIN CHARACTERISTICS

Product type:	Compressed air measuring system series EDZ 150 / 157
Application:	Compressed air measurement, CO2, technical gases like N2, O2, Ar etc.
Flow rate	max. flow rate: 5000 Nm³/h at 8 bar and 20°C
Measuring accuracy:	< ±1.0 % of measured value
Ex-approval:	Zone 2
Process temperature:	250°C (max 350°C)
Process pressure:	PN 40
Wetted parts:	Stainless steel
Power supply:	230 VAC or 24 VDC
Input:	PT 100, PT 1000 or PT 5000
Output:	2 x 4 –20 mA, 2 x Pulses via optocoupler
Process connection	Flanges
Special features:	short inlet and outlet distances, low permanent pressure loss, high accuracy and wide measuring range

AREA OF APPLICATION

e.g. car industry, breweries, producers of technical gases, etc.

MEASURING APPLICATION

This solution is designed for accurate measurement of compressed air in an automotive plant, a building, a large machine, a test bench

DESIGN OF THE MEASURING SYSTEM

- Venturi tube i.e. low pressure loss, short inlet and outlet section
- Plausibility check during operation according to ISO 5157
- Accuracy: ± 1 % of measured value, inverse ratio 10:1
- Nominal size: DN 25 to DN 200
- Ethernet interface, analogue and pulse outputs

Further information and product variants are available on request.

ENERGY FLOW COMPUTER ERW 700

METRA Energie-Messtechnik
Member of Bopp & Reuther Messtechnik Group

MAIN CHARACTERISTICS

Product type:	Flow and energy computer for liquids, gases and steam
Application:	• Billing meters for district and local heating • System monitoring in power plants • for heat/cold production in the medium and upper performance range • for high requirements on measurement accuracy and measurement stability
Approvals:	• MID approval as heat meter computer • PTB approval as cooling meter computer
Outputs:	• up to 7 digital outputs (optocoupler) • up to 6 analogue outputs 0/4-20 mA
Interfaces:	M-Bus, RS 232, RS485, Ethernet, Profibus DP
Protocols:	Modbus (ASCII, RTU, TCP/IP), Profibus DP
Special features:	• suitable for the material flows gases, liquids, steam and water • can be combined with all common volume / mass transmitters(differential pressure, vortex, dynamic pressure, ultrasound, MID, Coriolis) • extensive modular expandability of in- and outputs • large illuminated, graphic display • Parameterisation and operation via software and / or manually • suitable for wall mounting, panel mounting, 1/3 19“ Panel mounting

OPERATING MODES / APPLICATIONS

Liquids
- Energy, volume (mass) measurement, flow rate, heat output
- Bidirectional measurements such as charge / discharge of heat accumulators,
- Multi-tariff measurements
- Cold measurements for water and water-glycol mixtures, also for separate changing mixing ratios

Steam
- Energy, mass (volume), flow rate, heat output
- Calculation of the heat quantity/flow rate as a function of the process variables steam flow, steam pressure and steam temperature. For superheated steam, the calculation is pressure or temperature compensated. For saturated steam the calculation is either pressure or temperature compensated
- Special functions such as bidirectional measurements / steam / condensate connection or multi-tariff measurements
- 2 channel steam measurements, pressure and temperature compensated

Technical gases / air
- Energy, standard volume (mass), flow rate, heat output
- Calculation of the gas standard volume and gas mass as a function of the process variables gas flow, gas pressure and gas temperature.
- Determination of the heat quantity
- for changing gas mixtures, an input for direct density concentration measurement is available
- 2-channel gas measurements, pressure and temperature compensated

Further information and product variants are available on request.

PTB Physikalisch-Technische Bundesanstalt Braunschweig und Berlin **MID**

METRA Energie-Messtechnik
Member of Bopp & Reuther Messtechnik Group

Why should you get in touch with our team of specialists still today?

Energy management at your production site offers you the following decisive advantages:

- Monitoring and recording the energy consumption
- Optimizing the efficiency of processes ➡ tax benefit
- Energy savings ➡ less CO2 emissions
- Cost allocation of energy to the products

ISO 50001 MID BTU CO2 ISO 9001 ISO 5157

Made in Germany

Bopp & Reuther Messtechnik GmbH / SGE METRA Energie-Messtechnik
Am Neuen Rheinhafen 4 - 67346 Speyer / Deutschland
Phone: +49 6232 657-0 Mail: info@bopp-reuther.com www.metra-emt.de / www.bopp-reuther.com

EXAMPLE OF CALCULATION

Example of ROI for a typical steam measurement:

Parameters:

Medium:	steam, costs approx. 40 €/t
Diameter:	DN 150 / 6”
Pressure:	8 bar (abs.)
Temperature:	171°C
Mass flow:	9 t/h
Operation per year:	300 days = 7,200 hours

Overall costs: **9 t/h x 7200 h/a x 40 €/t = 2,592,000 €**

Your benefit will be: □25,000 € p.a. !

(Savings generated in cutting your measurement uncertainty by 1%)

REFERENCES

eine kleine Auswahl unserer Referenzen seit 1970:

Mineral oil

Shell
BP
Total
Ruhroel
ENI
MIRO
Petronas

Maschinery Manufacturers

Messpack
Boatopack
Volpak
Bossar
Bellapack
Hassia Redartron
Ilfamensa

Food

Ritter Sport
Weihenstephan
Haribo
Kraft Foods
Nestle
Unilever

Waste

TWL
Bremerhavener
Entsorgungsgesellschaft mbH
AVR B.V.
EVN AG

Plant Engineering

Siemens
Bilfinger

Pharmaceutical

Roche
Aventis
Sanofi
Merck
Ciba Geigi

Chemistry

BASF
Bayer
Alessa
Celanese
Clariant
Akzo Nobel
Emmtec

Energy

Evonik
Infraserv
RWE
Kraftanlagen
Stadtwerke
STEAG
Vattenfall
MVV

Automotive

Daimler
BMW
Audi
Porsche
Opel

METRA
Energie-Messtechnik
Member of Bopp & Reuther Messtechnik Group

Bopp & Reuther Messtechnik GmbH
Postbox 1709
67327 Speyer
Am Neuen Rheinhafen 4
67346 Speyer
Phone +49 6232 657-0
Fax +49 6232 657-505

Internet: www.bopp-reuther.de
E-mail: info@bopp-reuther.de

www.metra-emt.de
E-Mail: info@metra-emt.de